Technical Data Sheet		Rosenberger
FAKRA-HF	PLASTIC HOUSING	**59Z144-000-Y**

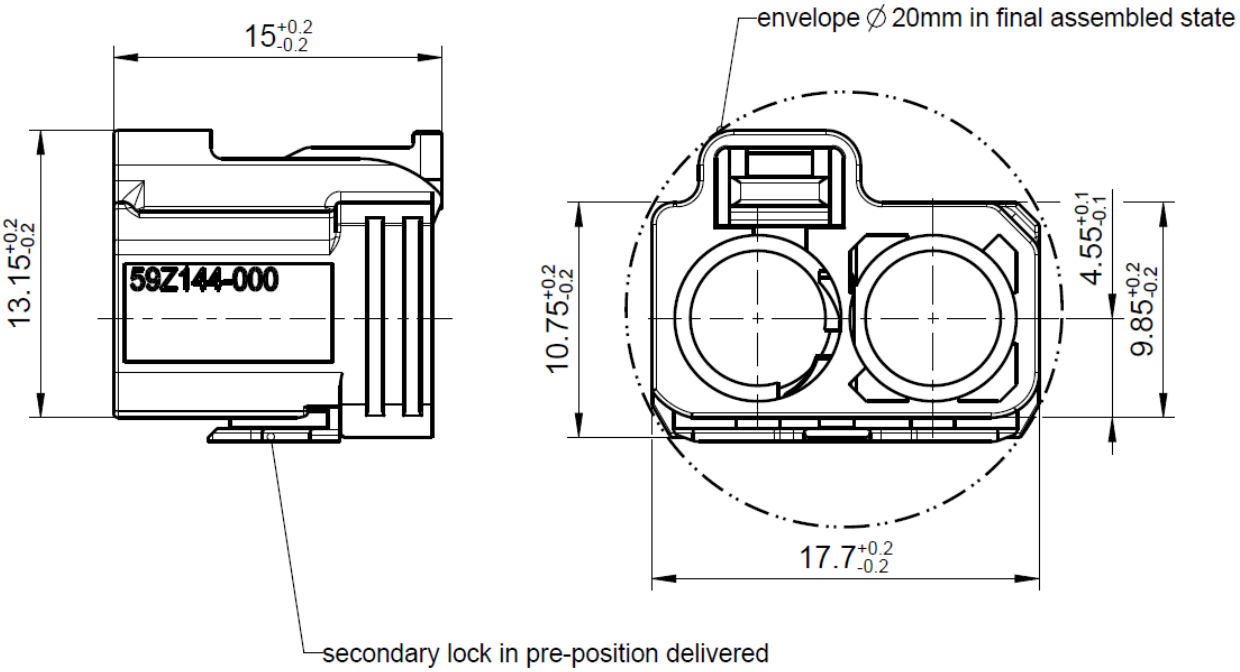

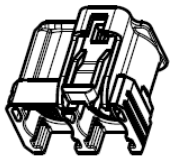

All dimensions are in mm
Y = Part number has to be accomplished by codification

Interface

According to	ISO 20860-1 DIN 72594-1

Material and plating

Housing	PBT-I-GF30
Secondary Lock	PBT-GF10

Mechanical data

Mating cycles	≥ 25
Retention force latch	≥ 110 N
Retention force primary lock	≥ 80 N
Retention force secondary lock	≥ 60 N
Coding efficiency	≥ 40 N

Dieses Dokument ist urheberrechtlich geschützt • This document is protected by copyright • Rosenberger Hochfrequenztechnik GmbH & Co. KG

Rosenberger Hochfrequenztechnik GmbH & Co. KG
P.O.Box 1260 D-84526 Tittmoning Germany
www.rosenberger.de

Tel. : +49 8684 18-0
Email : info@rosenberger.de

Environmental data

Temperature range	-40°C to +105°C
Thermal shock	ISO 20860-2 clause 9.2
Temperature and humidity	ISO 20860-2 clause 9.3
Vibration and mechanical shock	ISO 20860-2 clause 9.1
Dry heat	ISO 20860-2 clause 9.4
RoHS	compliant

Application

Applicable e.g. for following connectors: 59K26A-1xx*

** -1xx for all available cable variations*

Packing

Standard	1400 pcs in a box
Weight	1,50 g/pce

Coding

Part Number has to be accomplished by codification

Coding		Color	RAL	Part-Number
	A	black	sim. 9005	59Z144-000-A
	B	white	sim. 9001	59Z144-000-B
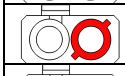	C	blue	sim. 5005	59Z144-000-C
	D	bordeauxviolet	sim. 4004	59Z144-000-D
	E	green	sim. 6002	59Z144-000-E
	F	brown	sim. 8011	59Z144-000-F
	G	grey	sim. 7031	59Z144-000-G
	H	violet	sim. 4003	59Z144-000-H
	I	beige	sim. 1001	59Z144-000-I
	K	curry	sim. 1027	59Z144-000-K
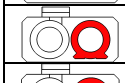	L	carmine red	sim. 3002	59Z144-000-L
	M	pastel orange	sim. 2003	59Z144-000-M
	N	pastel green	sim. 6019	59Z144-000-N
	Z	waterblue	sim. 5021	59Z144-000-Z
		traffic purple	sim. 4006	secondary lock

While the information has been carefully compiled to the best of our knowledge, nothing is intended as representation or warranty on our part and no statement herein shall be construed as recommendation to infringe existing patents. In the effort to improve our products, we reserve the right to make changes judged to be necessary.

Draft	Date	Approved	Date
A.Zaan	28.03.14	M. Geiger	01.02.23

Rev.	Engineering change number	Name	Date
a00	23-s033	J. Dandl	01.02.23

Rosenberger Hochfrequenztechnik GmbH & Co. KG
P.O.Box 1260 D-84526 Tittmoning Germany
www.rosenberger.de

Tel. : +49 8684 18-0
Email : info@rosenberger.de

Dieses Dokument ist urheberrechtlich geschützt ● This document is protected by copyright ● Rosenberger Hochfrequenztechnik GmbH & Co. KG