| Technical Data Sheet | | Rosenberger |
|---|---|---|
| FAKRA-HF | RIGHT ANGLE JACK PCB | **59K23C-40MA5-Y** |

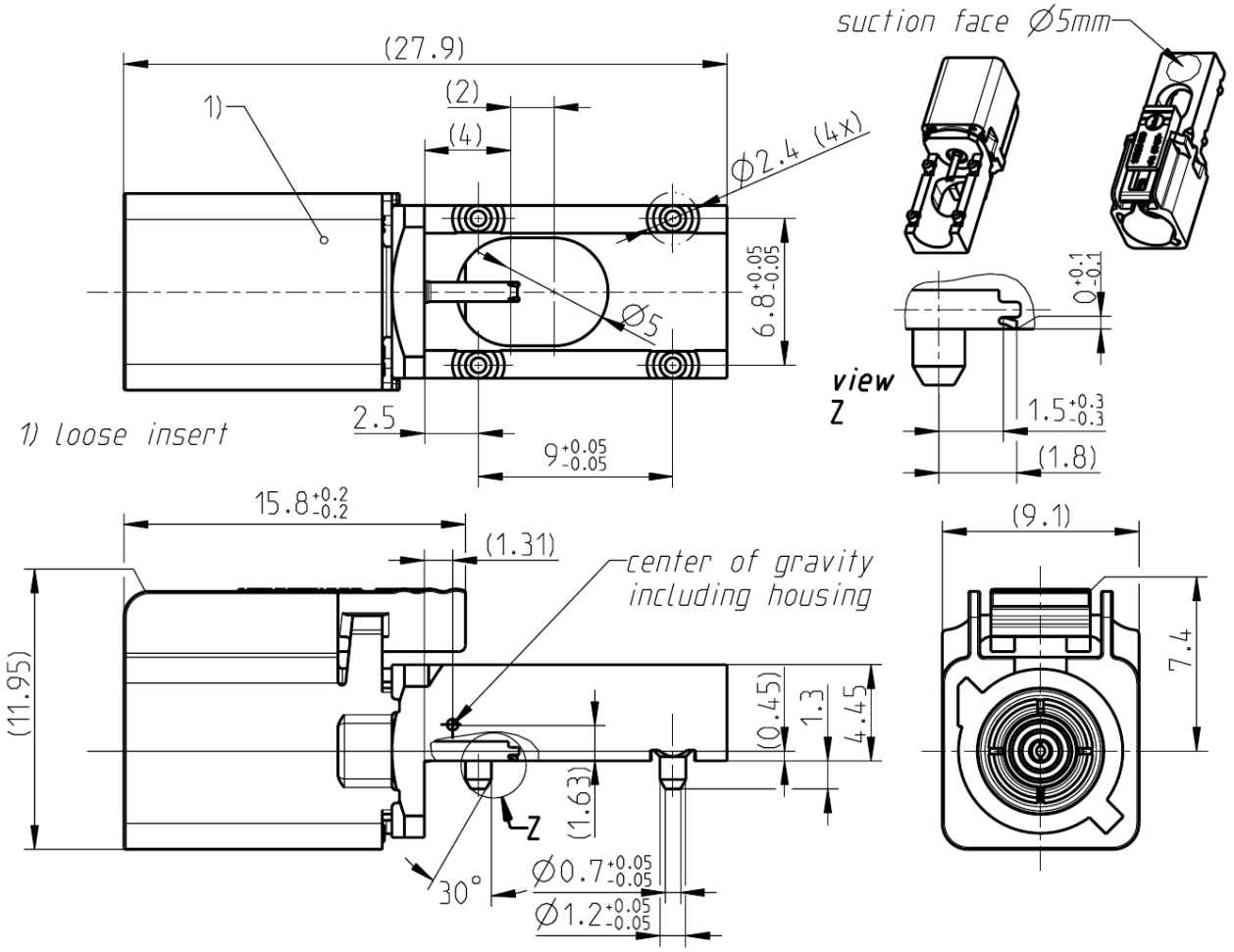


All dimensions are in mm; tolerances according to ISO 2768 m-H

## Interface

| | |
|---|---|
| According to | DIN 72594-1 |

## Documents

| | |
|---|---|
| Assembly instruction | MA_59V091 |
| PCB layout | MB_297 |

## Material and plating

| | | |
|---|---|---|
| Center contact | Spring bronze | AuroDur®, gold plated |
| Center contact alt. | Beryllium copper | AuroDur®, gold plated |
| Outer contact | Spring bronze | Nickel, 2.5-5 µm |
| Body | Brass | Tin, 6-8 µm |
| Dielectric | PTFE | |
| Housing | PA | |

Dieses Dokument ist urheberrechtlich geschützt • This document is protected by copyright • Rosenberger Hochfrequenztechnik GmbH & Co. KG



Rosenberger Hochfrequenztechnik GmbH & Co. KG
P.O.Box 1260 D-84526 Tittmoning Germany
www.rosenberger.de
Tel. : +49 8684 18-0
Fax : +49 8684 18-499
Email : info@rosenberger.de

## Electrical data

| | |
|---|---|
| Impedance | 50 |
| Frequency | DC to 6 GHz |
| Return loss | ≥ 26 dB, DC to 1 GHz |
| Insertion loss | $\leq 0.1 \times \sqrt{f(GHz)}$ dB |
| Insulation resistance | $\geq 1 \times 10^3$ MΩ |
| Center contact resistance | ≤ 5 mΩ |
| Outer contact resistance | ≤ 5 mΩ |
| Test voltage | 750 V rms |
| Working voltage | 335 V rms |
| Power current | ≤ 1 A DC |

7)

## Mechanical data

| | |
|---|---|
| Mating cycles | ≥ 25 |
| Engagement force | ≤ 25 N |
| Disengagement force | ≥ 2 N |
| Retention force latch | ≥ 110 N |
| Torsion strength | ≤ 60 Ncm |
| Coding efficiency | ≥ 40 N |

## Environmental data

| | |
|---|---|
| Temperature range | -40℃ to +105℃ |
| Thermal shock | DIN 72594-2 clause 6.2 |
| Temperature and humidity | DIN 72594-2 clause 6.3 |
| Vibration and mechanical shock | DIN 72594-2 clause 6.1 |
| Dry heat | DIN 72594-2 clause 6.4 |
| Soldering profile | acc. to IEC 60068-2-58; Group 3&4 |
| 2002/95/EC (RoHS) | compliant |

## Tooling

N/A

## Packing

| | |
|---|---|
| Standard | 1000 pcs in Box; 700 pcs in Tape&Reel |
| Weight | 4,60 g/pce |

Dieses Dokument ist urheberrechtlich geschützt ● This document is protected by copyright ● Rosenberger Hochfrequenztechnik GmbH & Co. KG



Rosenberger Hochfrequenztechnik GmbH & Co. KG
P.O.Box 1260 D-84526 Tittmoning Germany
www.rosenberger.de

Tel. : +49 8684 18-0
Fax : +49 8684 18-499
Email : info@rosenberger.de

## Coding

Part Number has to be accomplished by codification

| Coding | | Color | RAL | Part-Number |
|---|---|---|---|---|
| | A | black | sim. 9005 | 59K23C-40MA5_A |
| | B | white | sim. 9001 | 59K23C-40MA5_B |
| | C | blue | sim. 5005 | 59K23C-40MA5_C |
| | D | bordeauxviolet | sim. 4004 | 59K23C-40MA5_D |
| | E | green | sim. 6002 | 59K23C-40MA5_E |
| | F | brown | sim. 8011 | 59K23C-40MA5_F |
| | G | grey | sim. 7031 | 59K23C-40MA5_G |
| | H | violet | sim. 4003 | 59K23C-40MA5_H |
| | I | beige | sim. 1001 | 59K23C-40MA5_I |
| | K | curry | sim. 1027 | 59K23C-40MA5_K |
| | Z | waterblue | sim. 5021 | 59K23C-40MA5_Z |

While the information has been carefully compiled to the best of our knowledge, nothing is intended as representation or warranty on our part and no statement herein shall be construed as recommendation to infringe existing patents. In the effort to improve our products, we reserve the right to make changes judged to be necessary.

| Draft | Date | Approved | Date | Rev. | Engineering change number | Name | Date |
|---|---|---|---|---|---|---|---|
| T. Höfling | 12/06/08 | T. Höfling | 14/03/13 | d00 | 13-0283 | M. Kotewitz | 14/03/13 |

Rosenberger Hochfrequenztechnik GmbH & Co. KG
P.O.Box 1260 D-84526 Tittmoning Germany
www.rosenberger.de

Tel. : +49 8684 18-0
Fax : +49 8684 18-499
Email : info@rosenberger.de



Dieses Dokument ist urheberrechtlich geschützt ● This document is protected by copyright ● Rosenberger Hochfrequenztechnik GmbH & Co. KG